SMW AUTOBLOK

MX-S

MECHATRONIC SMALL PARTS GRIPPER

Gripping force independent of gripping speed and stroke
Mechatronic drive with gripping force retention
Position measuring system
Pre-positioning and gripping force adjustment

www.smw-autoblok.com
www.smw-electronics.com

SMW electronics

MX-S

Mechatronic gripper

Mechatronic small parts gripper

■ 2 finger parallel

Application/customer benefits

- Gripping force independent of gripping speed and stroke
- Mechatronic drive with gripping force retention
- Position measuring system absolute (MX-S 050)
- Pre-positioning and gripping force adjustment
- ID and OD clamping
- Suitable for use as small parts gripper due to lightweight and compact design
- Also suitable for cobot applications and pick & place tasks

Technical features

- Aluminum housing
- Protection class: IP40
- Adjustable gripping position and force
- Repeatability 0,02 mm
- Power supply 19.2 ... 30 V / up to 2 A
- Communication interface IO-Link or Digital-IO
- URCap optionally available

Standard equipment

Gripper with centering sleeves (without gripper fingers and mounting bolts)

MX-S

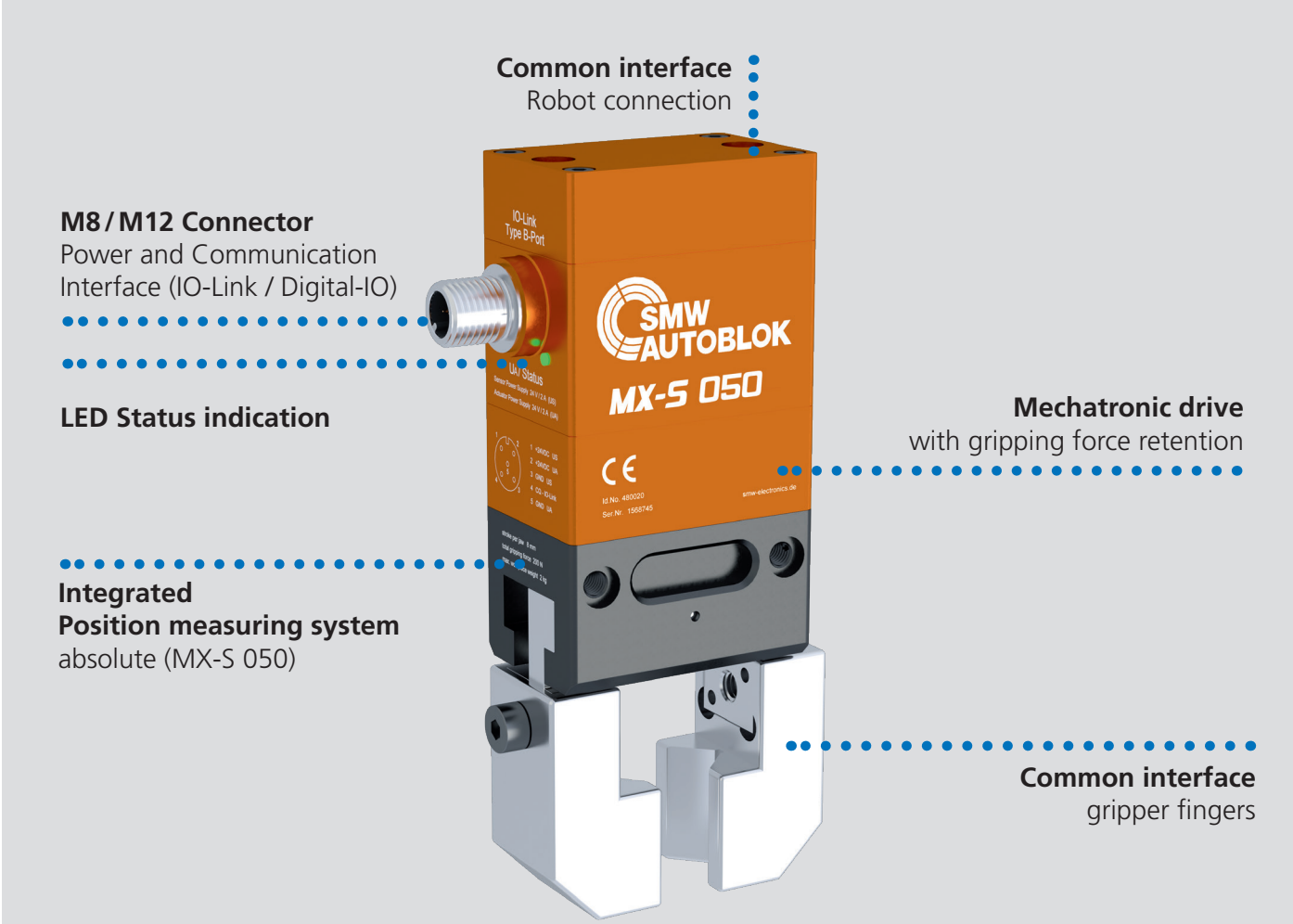

* The illustration shows an example with the MX-S 050 gripper.

Type	Communication Interface	Mechatronic drive	Gripping force retention	Position measuring system	Pre-positioning	Gripping force adjustment	URCap (optional)
MX-S 025	Digital-IO	●	●	●[1]	-	-	●
MX-S 050	IO-Link	●	●	●	●	●	-
	Digital-IO	●	●	●	●	●	●

[1] End position monitoring/gripper feedback

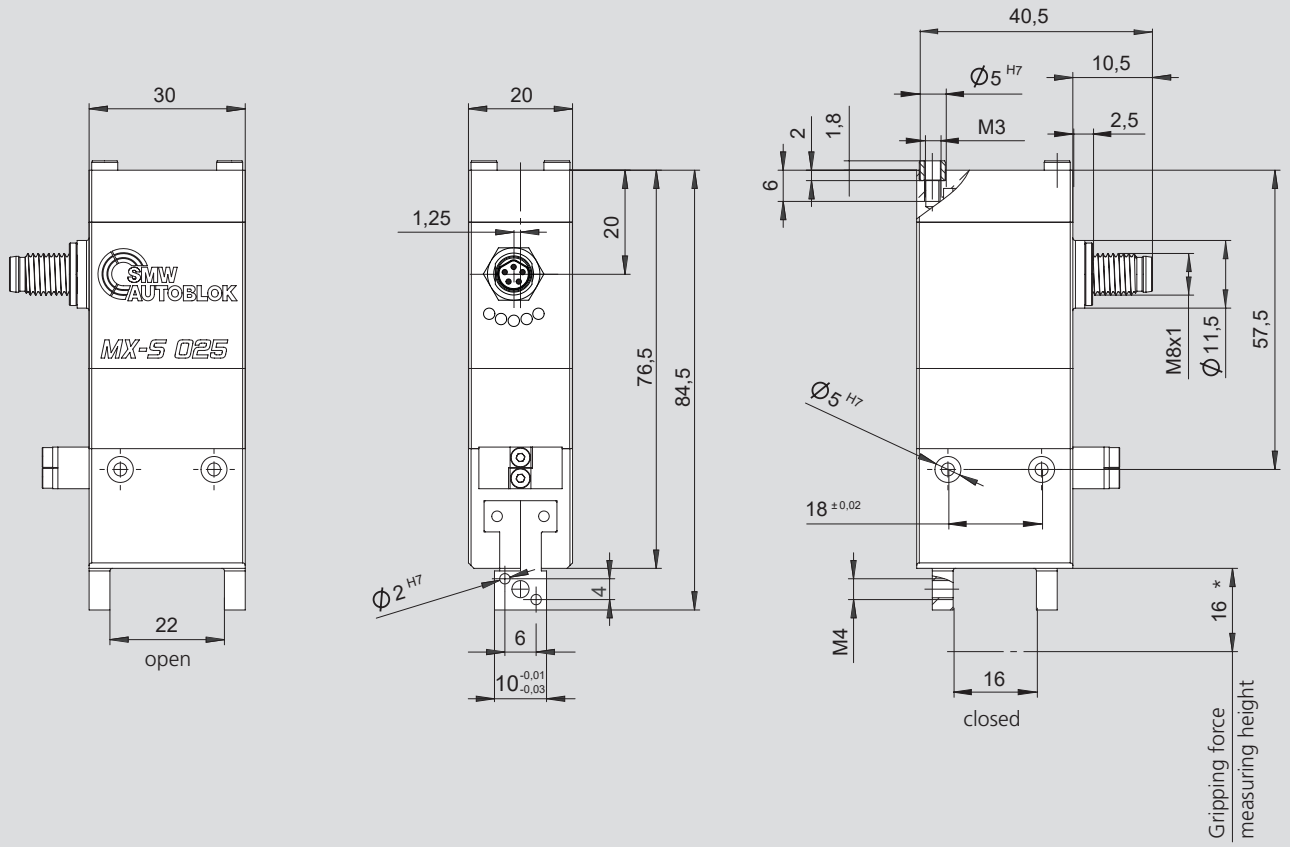

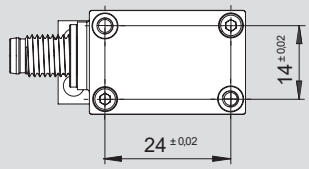

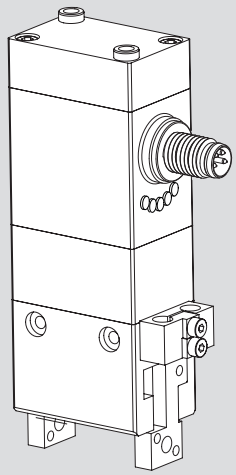

Subject to technical changes.
For more detailed information please ask our customer service.

*Gripping force is the arithmetic sum of the individual forces applied on each jaw at the specified distance.

Type		MX-S 025 DIO
Id. No.		**480150**
Gripping force	N	40
Stroke per jaw	mm	3
Repeatability	mm	0,02
Weight	kg	0,14
Recommended workpiece weight	kg	0,2
Closing time	s	0,07
Opening time	s	0,07
Voltage		19.2 ... 30 V
Max. Power consumption		1 A
Idle current (in non-moving state)		I < 100 mA
Protection class		IP40
Interface		Digital-IO

Pin assignment M8 x 1 - 5 Pin B-coded Male

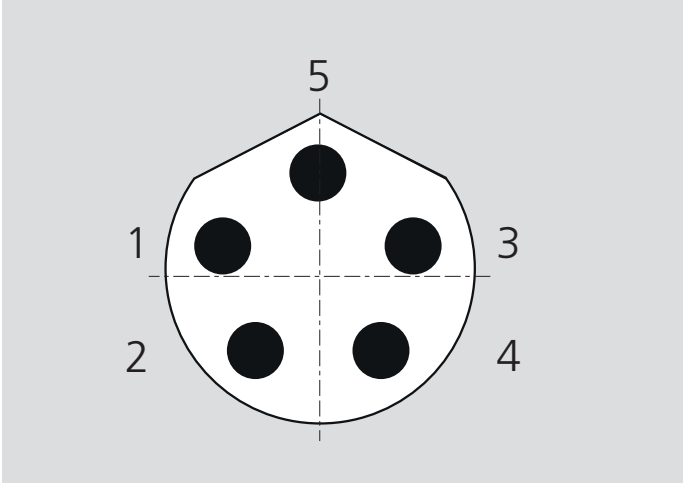

Digital IO Interface M8-5B		
Pin	**Function**	**Description**
1	+24V	Positive supply voltage
2	Opened	Digital output open feedback
3	GND	Ground
4	Ctrl	Digital input signal
5	Closed	Digital output closed Feedback

Force and moment loading

Forces and moments

Shows static forces and moments that can act in addition to the gripping force.

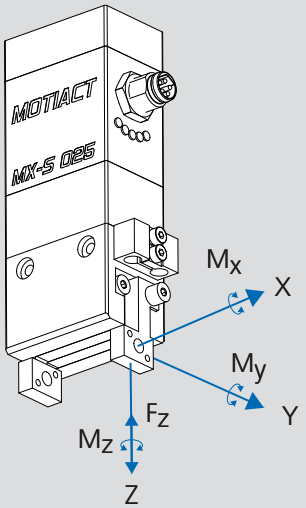

Mx	max. moment in X-axis	Nm	0,80
My	max. moment in Y-axis	Nm	0,60
Mz	max. moment in Z-axis	Nm	1,50
Fz	max. weight force in Z-axis	N	100

Notes

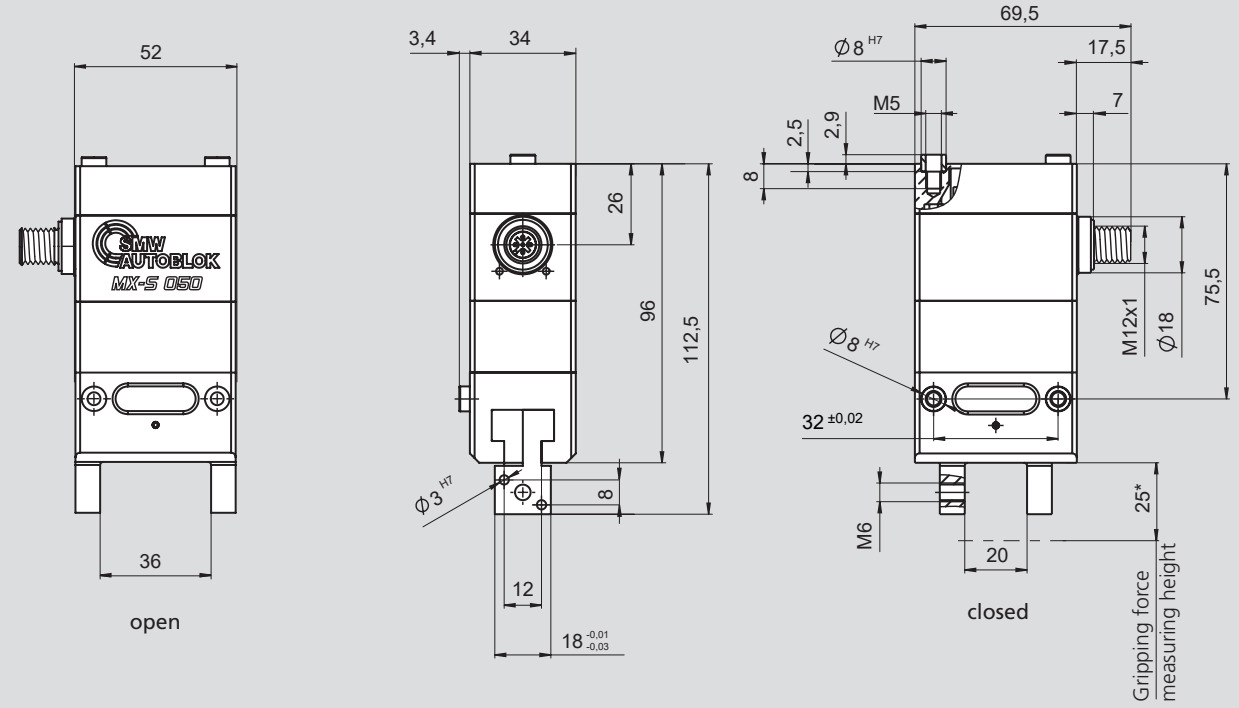

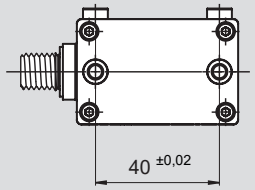

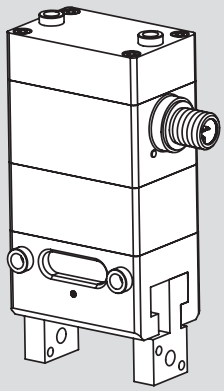

Subject to technical changes.
For more detailed information please ask our customer service.

*Gripping force is the arithmetic sum of the individual forces applied on each jaw at the specified distance.

Type		MX-S 050 IOL	MX-S 050 DIO
Id. No.		**480020**	**480120**
Gripping force	N	200	
Stepless gripping force adjustment	N	60 - 200	-
Stroke per jaw	mm	8	
Repeatability	mm	0,02	
Weight	kg	0,58	
Recommended workpiece weight	kg	1	
Closing time	s	0,35	
Opening time	s	0,35	
Voltage		U_a 19.2 ... 30 V, U_s 18 ... 30 V	19.2 ... 30 V
Max. Power consumption		$I_S \leq 100$ mA, $I_A \leq 2$ A	2 A
Idle current (in non-moving state)		$I_S = I_A < 100$ mA	I < 100 mA
Protection class		IP40	
Interface		IO-LINK	Digital-IO

Pin assignment M12 x 1 - 5 Pin A-coded Male

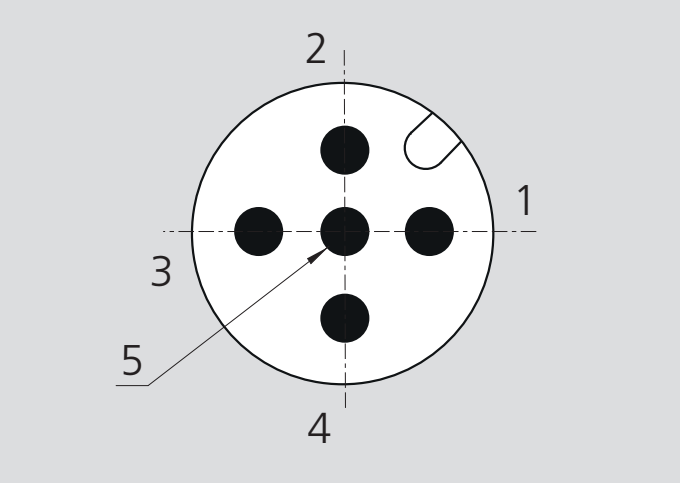

IO-Link Port B		
Pin	**Function**	**Description**
1	US+	Power supply IO-Link logic 24V DC
2	UA+	Power supply actuator 24V DC
3	US-	Ground IO-Link logic
4	C/Q	IO-Link signal
5	UA-	Ground Actuator

Digital IO Interface M12 - 5A		
Pin	**Function**	**Description**
1	+24V	Positive supply voltage
2	Opened	Digital output opened feedback
3	GND	Ground
4	Ctrl	Digital input control signal
5	Closed	Digital output closed feedback

Force and moment loading

Forces and moments

Shows static forces and moments that can act in addition to the gripping force.

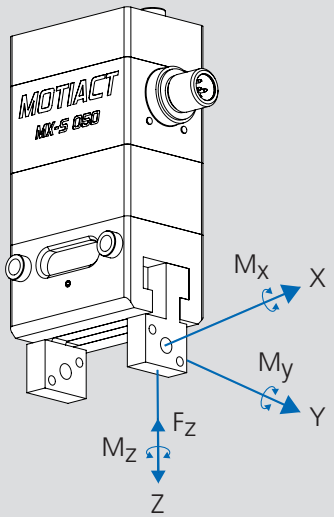

Mx	max. moment in X-axis	Nm	5
My	max. moment in Y-axis	Nm	5
Mz	max. moment in Z-axis	Nm	5
Fz	max. weight force in Z-axis	N	200

Use MX-S for automated quick jaw change with KNCS-*matic*

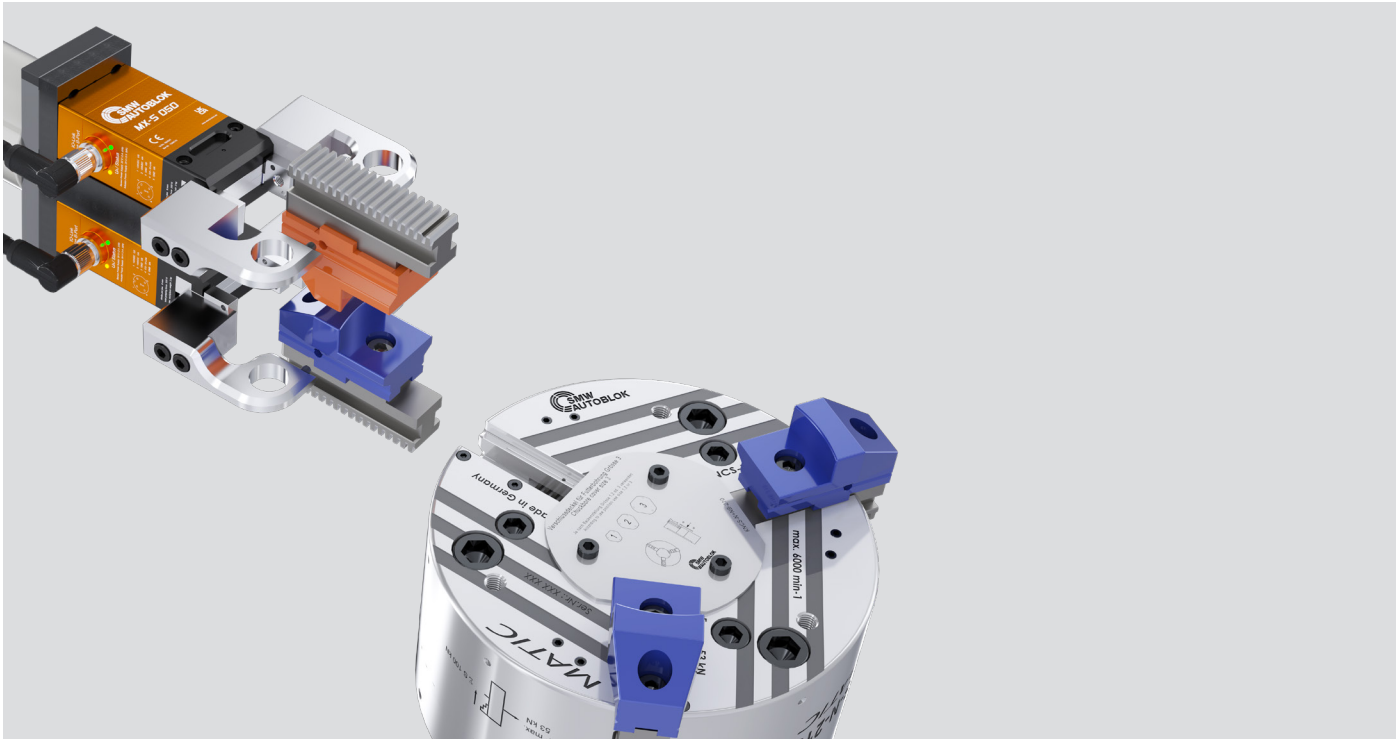

Use MX-S with inductive coupling system F100-2IOL

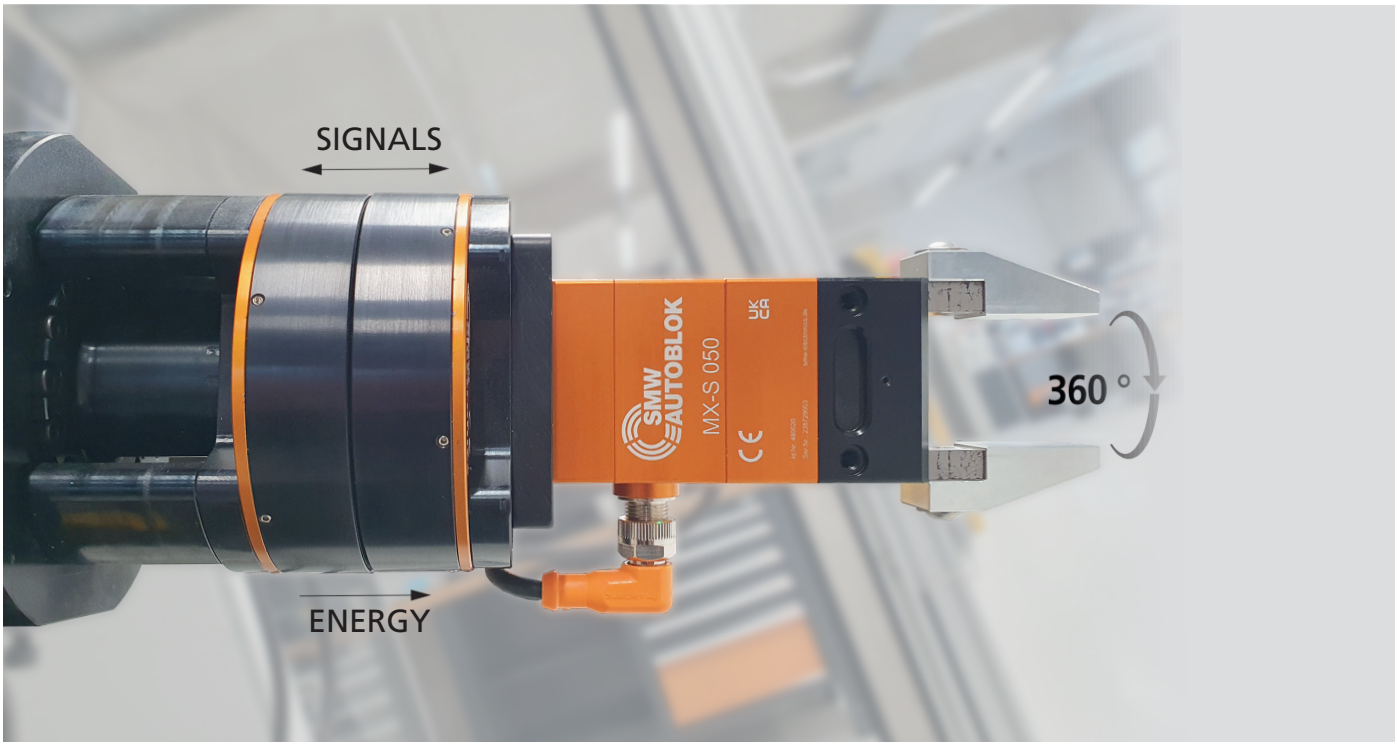

Advantages:

- > 360° rotation possible
- all advantages of inductive couplers versus slip ring: wear- and maintenance-free
- no interfering contour due to cables or hoses and no limitation due to acceleration forces
- extremely flat design due to direct mounting / TCP (Tool Center Point) close to flange

Notes

F100-2IOL

Axial coupler

Inductive Coupling System

■ Contact free transmission of energy and signals

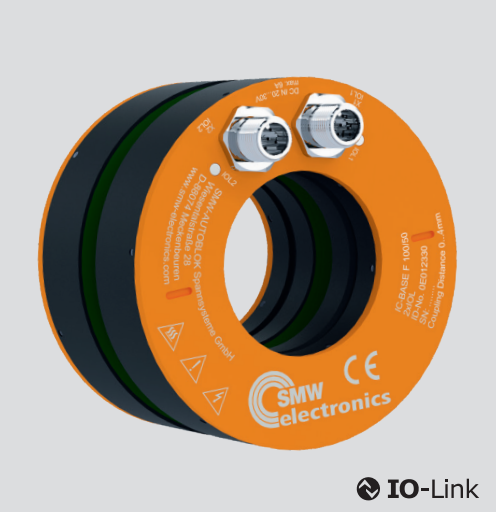

Application/customer benefits

- Contact free transmission of energy and signals between moving / rotating and stationary components
- Application examples: Robotic (End of Arm Tooling), Automation, Mechanical engineering
- Substitution of slip ring / connector
- Dynamic Pairing
- Wear and maintenance free
- Protective functions: temperature monitoring, foreign object detection, reverse polarity protection
- Status LED with good visibility

Technical features

- Diameter: 100 mm / Through hole 50 mm
- Operating voltage: 24 V / max 6 A
- Transmission distance: 0 - 4 mm
- Transmission of energy: 24 V / 75 W
- Transmission of signals: 2x IO-Link (COM 1, COM 2, COM 3)
- Connections: Base: 2x M12 x 1 male 5-pin, Remote: 2x M12 x 1 female 5-pin
- Protection class: IP67

Standard equipment

Inductive coupler base or remote

Block diagram

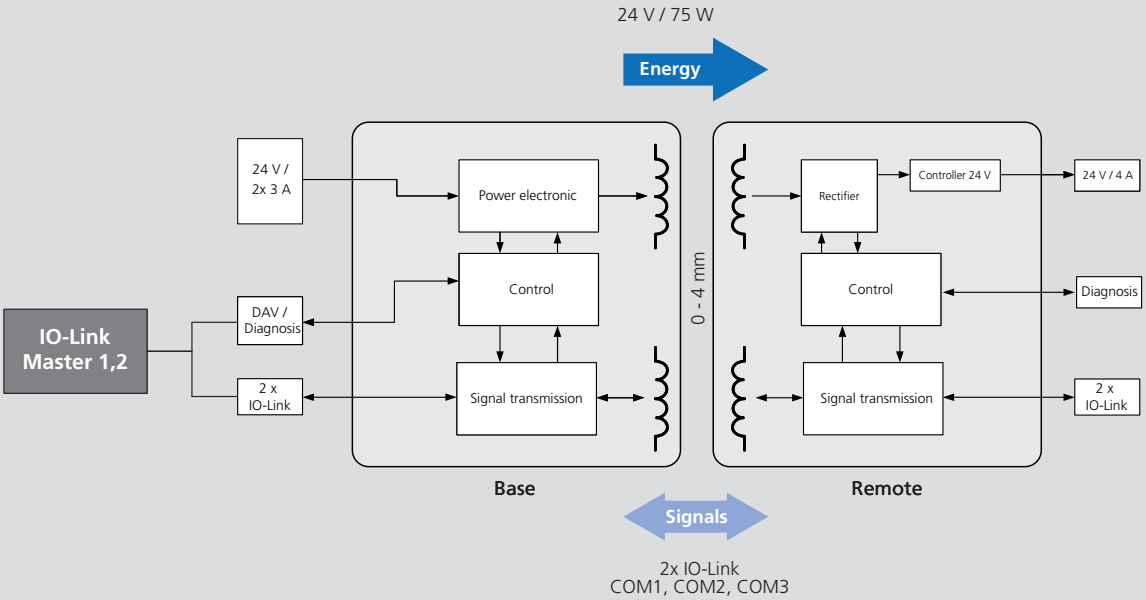

Subject to technical changes.
For more detailed information please ask our customer service.

IO-Link

Inductive coupling system F100-2IOL		
Type	**Base**	**Remote**
Id. No.	**0E012330**	**0E012331**
Operating temperature (housing surface)	-20 °C ... +60 °C	
Storage temperature	-20 °C ... +60 °C	
Transmission distance	0 mm ... 4 mm	
Operating voltage	24 V ± 10%	-
Current consumption (Base)	6 A (2x 3A)	-
Output voltage	-	24 V ± 5%
Output power	-	75 W
Signal transmission	2x IO-Link (COM2, COM 2, COM 3)	
LED	2 LEDs 2-color	
Overload protection / short circuit protection	✓	✓
Residual ripple	-	< 50 mV
Reverse polarity protection	✓	-
Data-Valid output	max. 100 mA	
Ready delay	< 1 s	

Inductive Coupling System

- Stationary unit - Base
- Mobile unit - Remote

F100-2IOL

Axial coupler

Base / Remote:

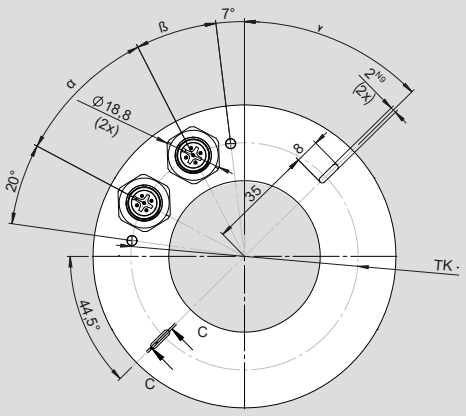

Base / Remote:

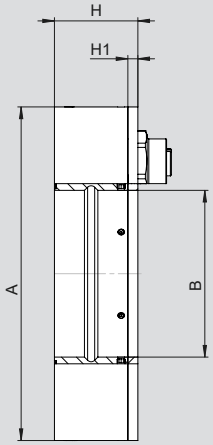

Base:

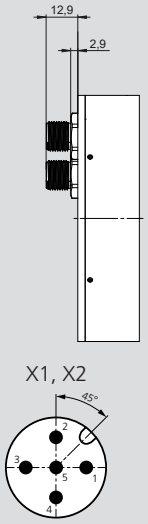

2x Male connector 5-pin
M12 x 1

Remote:

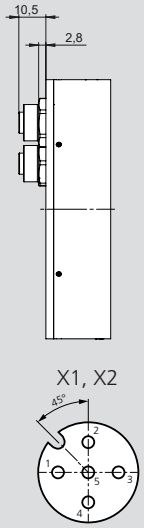

2x Female connector 5-pin
M12 x 1

Subject to technical changes.
For more detailed information please ask our customer service.

Inductive coupling system F100-2IOL			
Type		**Base**	**Remote**
Id. No.		**0E012330**	**0E012331**
A	mm	100	
B	mm	50	
C	mm	1	
H	mm	25	
H1	mm	3	
α	degree	35	
ß	degree	20	
γ	degree	45.5	
Housing material		Al, GFK	
Protection class		IP67	
Weight	kg	0,224	0,237

Function LED IO-Link Base (X1, X2)	
LED Power	
Color	Yellow / red
Function	Yellow » SIO mode active and SIO signal is high
	Flash yellow (1000 ms on, 100 ms off), » IO-Link communication active, power is on, Remote was detected
	Flashing 2 Hz yellow » no IO-Link device detected, power on, no Remote detected
	Flashing 2 Hz red » Short circuit on IO-Link PIN
	Flashing 5 Hz red » Overload voltage output Remote

Function LED IO-Link Remote (X1, X2)	
LED Power	
Color	Yellow / red
Function	Yellow » SIO mode active and SIO signal is high
	Flash yellow (1000 ms on, 100 ms off),» IO-Link communication active, power is on, Base has been detected
	Flashing 2 Hz yellow » No IO-Link communication, power on, no Base detected
	Flashing 2 Hz red » Short circuit on IO-Link PIN
	Flashing 5 Hz red » Overload voltage output Base

PIN assignment	PIN	X1 Base	X2 Base	X1 Remote	X2 Remote
Supply voltage	1	24 V IN	24 V IN	24 V OUT	24 V OUT
Data-Valid	2	DAV 24 V	-	-	-
Ground	3	GND	GND	GND	GND
IO-Link Signal	4	IO-Link CQ	IO-Link CQ	IO-Link CQ	IO-Link CQ
-	5	-	-	-	-

Standard flange

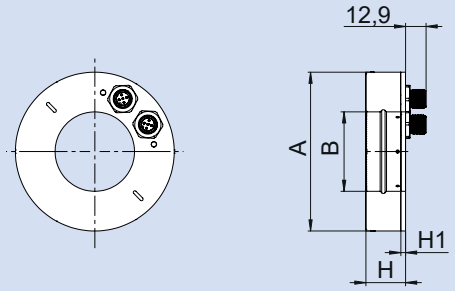

Type	F100-2IOL		F100 Etherent	
	IC-Base-F100-2IOL D100/050	IC-Remote-F100-2IOL D100/050	IC-Base-F100-ETH D100/050	IC-Remote-F100-ETH D100/050
Id.-No.	0E012330	0E012331	0E011420	0E011421
A	100			
B	50			
B1	-			
B2	-			
H	25			
H1	3			
Weight	0.26 kg			

Outer flange with feed-through

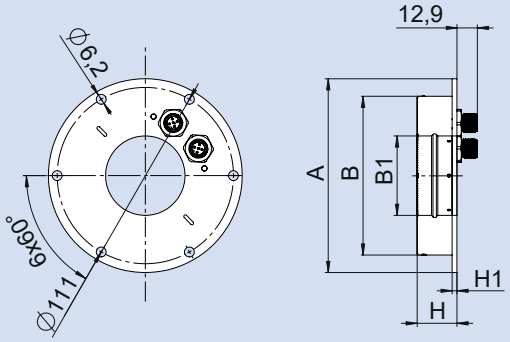

Type	F100-2IOL		F100 Etherent	
	IC-Base F100-2IOL D122/050	IC-Remote-F100-2IOL D122/050	IC-Base F100-ETH D122/050	IC-Remote-F100-ETH D122/050
Id.-No.	0E012332	0E012333	0E012320	0E012321
A	122			
B	100			
B1	50			
B2	-			
H	25			
H1	3			
Weight	0.36 kg			

Inner flange with feed-through

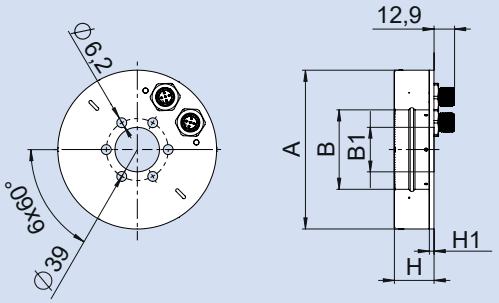

Type	F100-2IOL		F100 Etherent	
	IC-Base F100-2IOL D100/028	IC-Remote-F100-2IOL D100/028	IC-Base F100-ETH D100/028	IC-Remote-F100-ETH D100/028
Id.-No.	0E012334	0E012335	0E012322	0E012323
A	100			
B	50			
B1	28			
B2	-			
H	25			
H1	3			
Weight	0.34 kg			

Flangering with feed-through

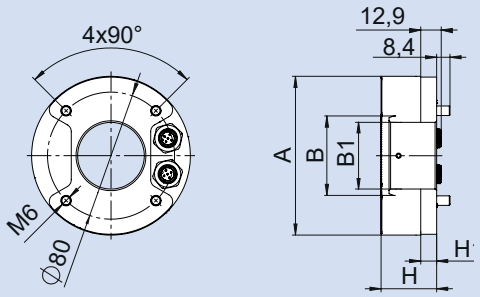

Type	F100-2IOL		F100 Etherent	
	IC-Base F100-2IOL D100/042	IC-Remote-F100-2IOL D100/042	IC-Base F100-ETH D100/042	IC-Remote-F100-ETH D100/042
Id.-No.	0E012336	0E012337	0E012324	0E012325
A	100			
B	50			
B1	42			
B2	-			
H	25			
H1	10			
Weight	0.48 kg			

FURTHER OPTIONS AVAILABLE ON REQUEST!

- Outer flange without feed-through
- Inner flange without feed-through
- Threaded sleeve with without feed-through

Notes

Notes

Notes

Germany
SMW-AUTOBLOK Spannsysteme GmbH
Wiesentalstraße 28 • D-88074 Meckenbeuren

SMW-electronics GmbH
Wiesentalstraße 19 • D-88074 Meckenbeuren

Tel. +49 (0) 7542 - 405 - 0
E-mail ➤ info@smw-autoblok.de
E-mail ➤ info@smw-electronics.de

U.S.A.
SMW-AUTOBLOK Corporation
285 Egidi Drive - Wheeling, IL 60090
Tel. +1 847 - 215 - 0591
Fax +1 847 - 215 - 0594
E-mail ➤ autoblok@smwautoblok.com

Japan
SMW-AUTOBLOK Japan Inc.
1-56 Hira, Nishi-Ku, Nagoya
Tel. +81 (0) 52 - 504 - 0203
Fax +81 (0) 52 - 504 - 0205
E-mail ➤ infosaj@smwautoblok.co.jp

China
SMW-AUTOBLOK (Shanghai) Work Holding Co.,Ltd.
2dn Floor, Building 1, No.141, Xuanchung Road,
Xuanchung Town, Pudong District,
201399, Shanghai P. R. China
Tel. +86 21 - 5810 - 6396, Fax +86 21 - 5810 - 6395
E-mail ➤ china@smwautoblok.cn

Mexico
SMW-AUTOBLOK Mexico, S.A. de C.V.
Acceso III No. 16 Int. 9, Condominio Quadrum
Industrial Benito Juarez,Queretaro, Qro. C.P. 76120
Tel. +52 (442) 209 - 5118, Fax +52 (442) 209 - 5121
E-mail ➤ smwmex@smwautoblok.mx

India
SMW-AUTOBLOK Workholding Pvt. Ltd.,
Plot No. 4, Weikfield Industrial Estate, Gat No. 125,
Sanaswadi, Tal - Shirur, Dist – Pune. 412 208
Tel. +91 2137 - 616 974
E-mail ➤ info@smwautoblok.in

Turkey
SMW AUTOBLOK Makina San. Ve Tic. Ltd. Sti.
Yenisehir Mah, Osmanli Blv, Volume Kurtköy Ofis
No: 9, Kat: 2, D: 30, 34912, Pendik, Istanbul
Tel. +90 216 629 20 19
E-mail ➤ info@smwautoblok.com.tr

Sweden / Norway
SMW-AUTOBLOK Scandinavia AB
Kommendörsgatan 3
281 35 Hässleholm
Tel. +46 (0) 761 420 111
E-mail ➤ info@smw-autoblok.se

Holland / Belgium
SMW Autoblok Benelux B.V.
Zeearend 7, 7609PT Almelo
Tel. +31 546 812 615
E-mail ➤ info@smwautoblok.nl

Italy
AUTOBLOK s.p.a.
Via Duca D'Aosta n.24
Fraz. Novaretto
I-10040 Caprie - Torino

Tel. +39 011 - 9638411
Tel. +39 011 - 9632020
Fax +39 011 - 9632288
E-mail ➤ info@smwautoblok.it

France
SMW-AUTOBLOK
17, Avenue des Frères Montgolfier - Z.I. Mi-Plaine
F-69680 Chassieu
Tel. +33 (0) 4 727 91818, Fax +33 (0) 4 727 918 19
E-mail ➤ autoblok@smwautoblok.fr

Great Britain
SMW-AUTOBLOK Telbrook Ltd.
7 Wilford Industrial Estate, Ruddington Lane,
Wilford, GB-Nottingham, NG11 7EP
Tel. +44 (0) 115 - 982 1133
E-mail ➤ info@smw-autoblok-telbrook.co.uk

Spain
SMW-AUTOBLOK IBERICA, S.L.
Ursalto 4 – Pab. 9-10 Pol. 27,
20014 Donostia - San Sebastián (Gipuzkoa)
Tel.: +34 943 - 225 079, Fax: +34 943 - 225 074
E-mail ➤ info@smwautoblok.es

Canada
SMW AUTOBLOK CANADA CORP
1460 The Queensway - Suite 219
Etobicoke,ON M8Z 1S7
Tel. +1 416 - 316 - 3839
E-mail ➤ info@smwautoblok.ca

Taiwan
AUTOBLOK Company Ltd.
No.6, Shuyi Rd., South Dist.,
Taichung, Taiwan
Tel. +886 4-226 10826, Fax +886 4-226 12109
E-mail ➤ taiwan@smwautoblok.tw

Czech Republic / Slovakia
SMW-AUTOBLOK s.r.o.
Merhautova 20
CZ - 613 00 Brno
Tel. +420 513 034 157
E-mail ➤ info@smw-autoblok.cz

Poland
SMW-AUTOBLOK Poland Sp. z.o.o
OGRODNICZA 12
95 - 100 ZGIERZ
Tel. +48 736 059 699
E-mail ➤ info@smwautoblok.pl

Korea
SMW-AUTOBLOK KOREA CO., LTD.
1502-ho, Charyong-ro 48beon-gil,
Uichang-gu, Changwon-si
Gyeongsangnam-do, 51391, Republic of Korea
Tel. +82 55 264 9505
E-mail ➤ info-korea@smw-autoblok.net

SMW AUTOBLOK
www.smw-autoblok.com

SMW electronics
www.smw-electronics.com

© SMW-electronics | Subject to technical changes and mistakes. 0M001345 • MX-S_EN_07_2026